# WTC SERIES
# NEW COM-BOX
# WALL TYPE CABINET

## COM-BOX

Mirsan, with the new COM-BOX series gives a new angle to the understanding of the wall-type cabinet. New Series; design, advanced structural advantages, ease of use of the most importantly with the advantage of unbeatable price advantage has provided superior.

## CAPACITY and VARIETY

The new COM-BOX wall type cabinets have a loading capacity of 80 kg when mounted on the wall. 2 pieces rails are used in D=450mm cabinets while 4 pieces of rails are used in D=600mm cabinets. The new COM-BOX has the width of 565mm and depths of 450mm and 600mm. The size alternatives are offered as 6U, 7U, 9U, 12U, 16U and 20U.

# CUSTOMIZE YOUR OWN COLOR

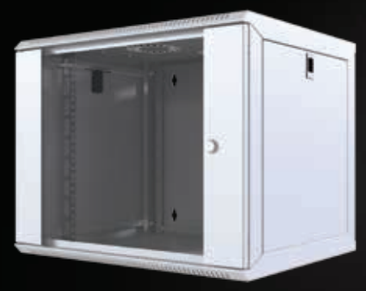
White

Black

Black & White

White & Black

Black & Red

Red & White

With the new COM-BOX, you can determine your own color and make it suitable for your location.

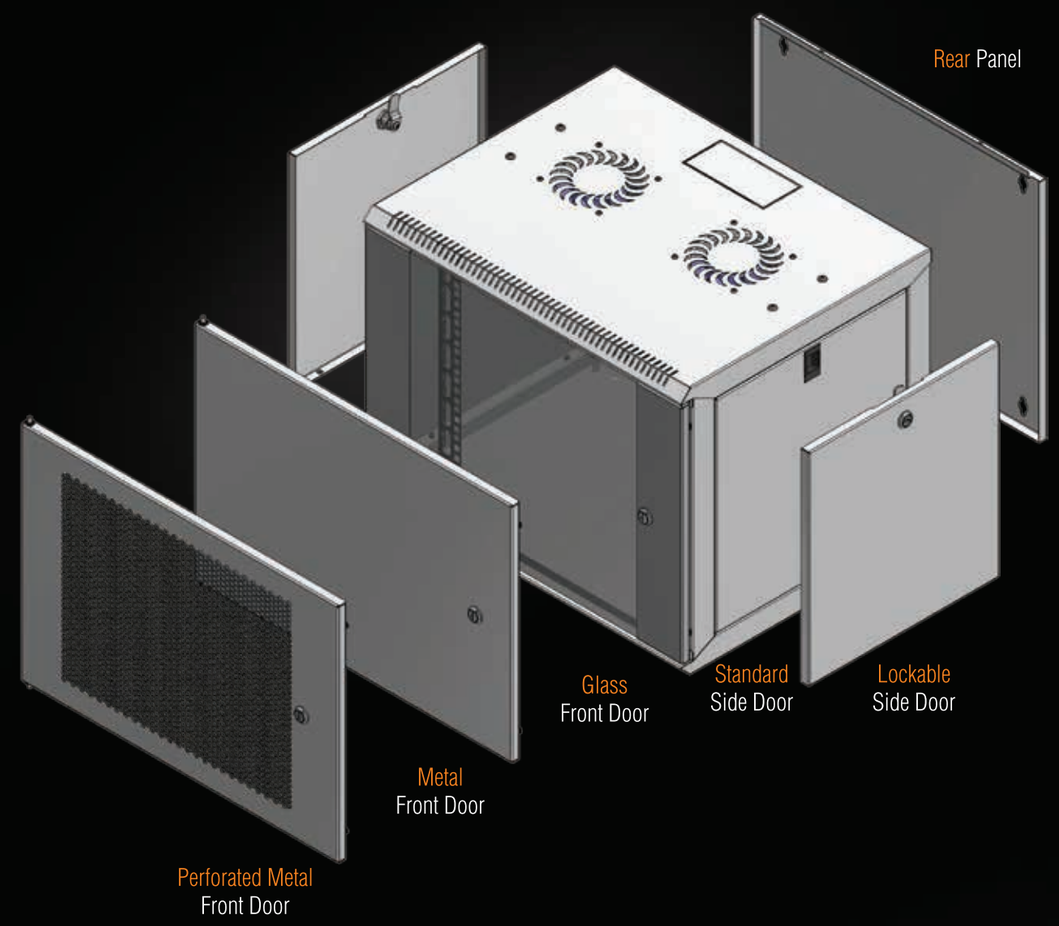

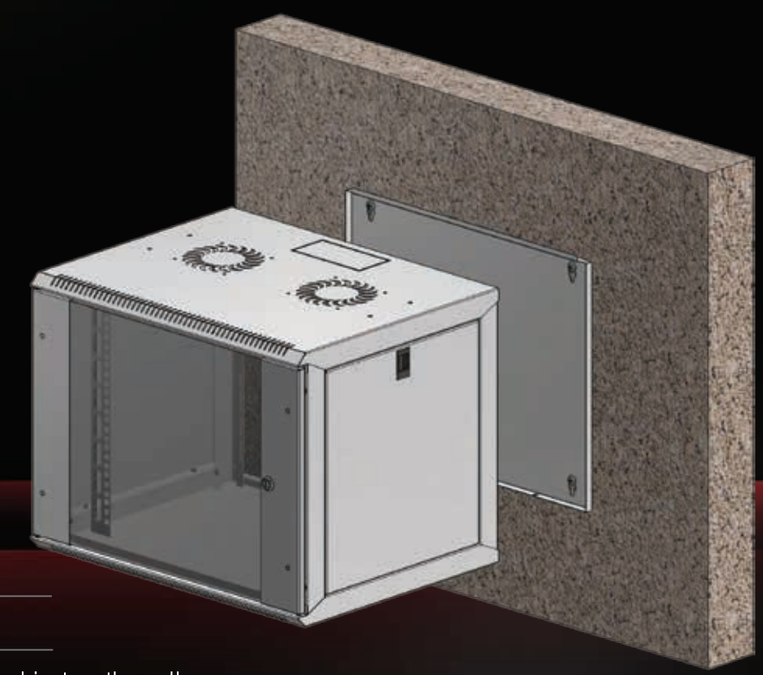

## DOORS

Removable and lockable side panels of the new COM-BOX wall type cabinets offers offers easy access. Glass front door with special slotted design metal frame presents a modern view.

## WALL MOUNTING

After mounting the rear panel of the cabinet on the wall with 4 screws, it is easy to hang and mount the cabinet.

# WTC COM-BOX WALL TYPE CABINET

## MODULAR STRUCTURE

All unassembled COM-BOX cabinets are delivered in single packs offering protection for the transport.

## UNASSEMBLED COST ADVANTAGE

With unassembled delivery option, the cabinet provides 75% space saving ensuring 75% transport and stock advantage.

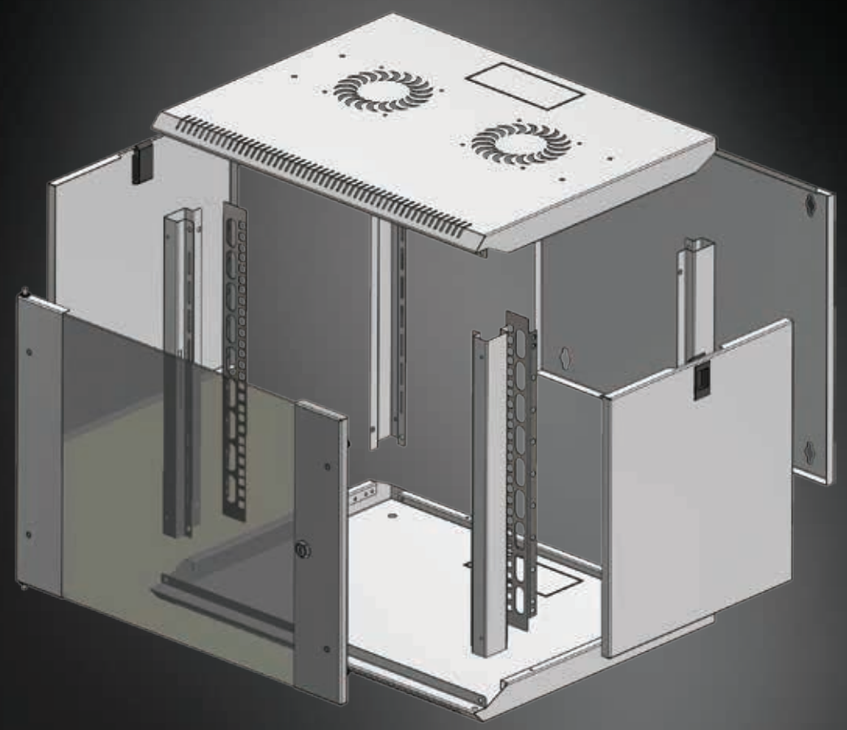

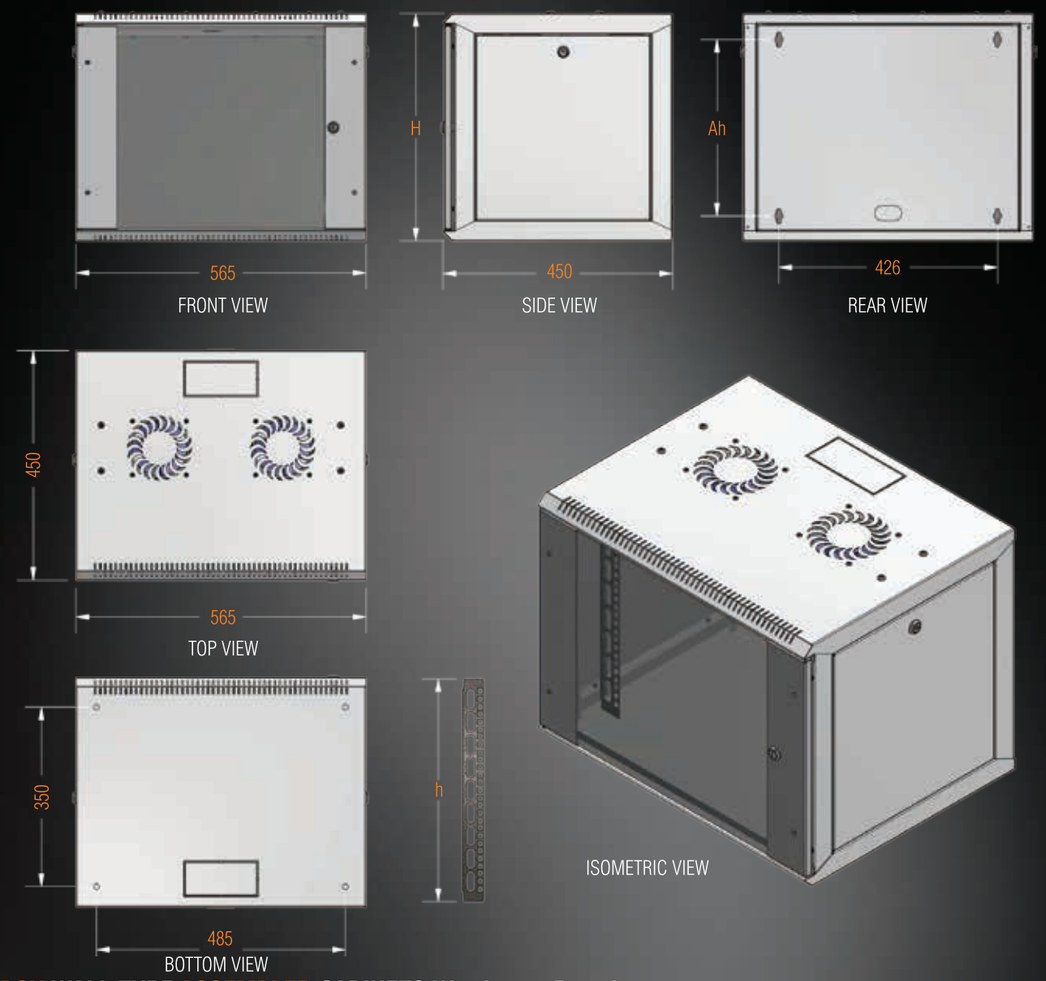


### COM-BOX WALL TYPE UNASSEMBLED CABINETS W=565mm D=450mm

| Product Code | Product Description | h Measurement (U) | Product Dimensions WxDxH (mm) | Width: Between Rails | Ah Wall Mounting Hole Gaps (mm) | h Measurement (mm) | Package Dimensions WxDxH (mm) | Number in the Package (pcs) | Product Net Weight (kg) | Product Gross Weight (kg) | Number on Pallet (pcs) | Pallet Dimensions WxDxH (mm) | Pallet Weight (kg) | DEPTH: Between rail and rear panel (mm) |
|---|---|---|---|---|---|---|---|---|---|---|---|---|---|---|
| MR.WTC06U45DE.XX | 6U W=565mm D=450mm Demonte COM-BOX | 6U | 565x450x310 | 19" | 212 | 300 | 585x470x330 | 1 | 10,0 | 11,5 | 20 | 1200x1300x2400 | 436 | 443 |
| MR.WTC07U45DE.XX | 7U W=565mm D=450mm Demonte COM-BOX | 7U | 565x450x355 | 19" | 256 | 345 | 585x470x375 | 1 | 12,0 | 13,5 | 20 | 1200x1300x2400 | 436 | 443 |
| MR.WTC09U45DE.XX | 9U W=565mm D=450mm Demonte COM-BOX | 9U | 565x450x445 | 19" | 345 | 435 | 585x470x465 | 1 | 15,0 | 16,5 | 16 | 1200x1300x2280 | 390 | 443 |
| MR.WTC12U45DE.XX | 12U W=565mm D=450mm Demonte COM-BOX | 12U | 565x450x580 | 19" | 479 | 568 | 585x470x600 | 1 | 19,9 | 21,4 | 12 | 1200x1300x2150 | 350 | 443 |
| MR.WTC16U45DE.XX | 16U W=565mm D=450mm Demonte COM-BOX | 16U | 565x450x755 | 19" | 657 | 746 | 585x470x775 | 1 | 26,5 | 28,0 | 10 | 1200x1300x2450 | 346 | 443 |
| MR.WTC20U45DE.XX | 20U W=565mm D=450mm Demonte COM-BOX | 20U | 565x450x935 | 19" | 835 | 924 | 585x470x955 | 1 | 33,2 | 34,7 | 8 | 1200x1300x2250 | 322 | 443 |

### COM-BOX WALL TYPE UNASSEMBLED CABINETS W=565mm D=600mm

| Product Code | Product Description | h Measurement (U) | Product Dimensions WxDxH (mm) | Width: Between Rails | Ah Wall Mounting Hole Gaps (mm) | h Measurement (mm) | Package Dimensions WxDxH (mm) | Number in the Package (pcs) | Product Net Weight (kg) | Product Gross Weight (kg) | Number on Pallet (pcs) | Pallet Dimensions WxDxH (mm) | Pallet Weight (kg) | DEPTH: Between rail and rear panel (mm) |
|---|---|---|---|---|---|---|---|---|---|---|---|---|---|---|
| MR.WTC06U60DE.XX | 6U W=565mm D=600mm Demonte COM-BOX | 6U | 565x600x310 | 19" | 212 | 300 | 585x620x330 | 1 | 13,5 | 15,0 | 20 | 1200x1300x2400 | 436 | 593 |
| MR.WTC07U60DE.XX | 7U W=565mm D=600mm Demonte COM-BOX | 7U | 565x600x355 | 19" | 256 | 345 | 585x620x375 | 1 | 15,5 | 17,0 | 20 | 1200x1300x2400 | 436 | 593 |
| MR.WTC09U60DE.XX | 9U W=565mm D=600mm Demonte COM-BOX | 9U | 565x600x445 | 19" | 345 | 435 | 585x620x465 | 1 | 18,5 | 20,0 | 16 | 1200x1300x2280 | 390 | 593 |
| MR.WTC12U60DE.XX | 12U W=565mm D=600mm Demonte COM-BOX | 12U | 565x600x580 | 19" | 479 | 568 | 585x620x600 | 1 | 23,4 | 24,9 | 12 | 1200x1300x2150 | 350 | 593 |
| MR.WTC16U60DE.XX | 16U W=565mm D=600mm Demonte COM-BOX | 16U | 565x600x755 | 19" | 657 | 746 | 585x620x775 | 1 | 30,0 | 31,5 | 10 | 1200x1300x2450 | 346 | 593 |
| MR.WTC20U60DE.XX | 20U W=565mm D=600mm Demonte COM-BOX | 20U | 565x600x935 | 19" | 835 | 924 | 585x620x955 | 1 | 36,7 | 38,2 | 8 | 1200x1300x2250 | 322 | 593 |

### COM-BOX WALL TYPE ASSEMBLED CABINETS W=565mm D=450mm

| Product Code | Product Description | h Measurement (U) | Product Dimensions WxDxH (mm) | Width: Between Rails | Ah Wall Mounting Hole Gaps (mm) | h Measurement (mm) | Package Dimensions WxDxH (mm) | Number in the Package (pcs) | Product Net Weight (kg) | Product Gross Weight (kg) | Number on Pallet (pcs) | Pallet Dimensions WxDxH (mm) | Pallet Weight (kg) | DEPTH: Between rail and rear panel (mm) |
|---|---|---|---|---|---|---|---|---|---|---|---|---|---|---|
| MR.WTC06U45MN.XX | 6U W=565mm D=450mm Montajli COM-BOX | 6U | 565x450x310 | 19" | 212 | 300 | 585x470x330 | 1 | 10,0 | 11,5 | 20 | 1200x1300x2400 | 436 | 443 |
| MR.WTC07U45MN.XX | 7U W=565mm D=450mm Montajli COM-BOX | 7U | 565x450x355 | 19" | 256 | 345 | 585x470x375 | 1 | 12,0 | 13,5 | 20 | 1200x1300x2400 | 436 | 443 |
| MR.WTC09U45MN.XX | 9U W=565mm D=450mm Montajli COM-BOX | 9U | 565x450x445 | 19" | 345 | 435 | 585x470x465 | 1 | 15,0 | 16,5 | 16 | 1200x1300x2280 | 390 | 443 |
| MR.WTC12U45MN.XX | 12U W=565mm D=450mm Montajli COM-BOX | 12U | 565x450x580 | 19" | 479 | 568 | 585x470x600 | 1 | 19,9 | 21,4 | 12 | 1200x1300x2150 | 350 | 443 |
| MR.WTC16U45MN.XX | 16U W=565mm D=450mm Montajli COM-BOX | 16U | 565x450x755 | 19" | 657 | 746 | 585x470x775 | 1 | 26,5 | 28,0 | 10 | 1200x1300x2450 | 346 | 443 |
| MR.WTC20U45MN.XX | 20U W=565mm D=450mm Montajli COM-BOX | 20U | 565x450x935 | 19" | 835 | 924 | 585x470x955 | 1 | 33,2 | 34,7 | 8 | 1200x1300x2250 | 322 | 443 |

### COM-BOX WALL TYPE ASSEMBLED CABINETS W=565mm D=600mm

| Product Code | Product Description | h Measurement (U) | Product Dimensions WxDxH (mm) | Width: Between Rails | Ah Wall Mounting Hole Gaps (mm) | h Measurement (mm) | Package Dimensions WxDxH (mm) | Number in the Package (pcs) | Product Net Weight (kg) | Product Gross Weight (kg) | Number on Pallet (pcs) | Pallet Dimensions WxDxH (mm) | Pallet Weight (kg) | DEPTH: Between rail and rear panel (mm) |
|---|---|---|---|---|---|---|---|---|---|---|---|---|---|---|
| MR.WTC06U60MN.XX | 6U W=565mm D=600mm Montajli COM-BOX | 6U | 565x600x310 | 19" | 212 | 300 | 585x620x330 | 1 | 13,5 | 15,0 | 20 | 1200x1300x2400 | 436 | 593 |
| MR.WTC07U60MN.XX | 7U W=565mm D=600mm Montajli COM-BOX | 7U | 565x600x355 | 19" | 256 | 345 | 585x620x375 | 1 | 15,5 | 17,0 | 20 | 1200x1300x2400 | 436 | 593 |
| MR.WTC09U60MN.XX | 9U W=565mm D=600mm Montajli COM-BOX | 9U | 565x600x445 | 19" | 345 | 435 | 585x620x465 | 1 | 18,5 | 20,0 | 16 | 1200x1300x2280 | 390 | 593 |
| MR.WTC12U60MN.XX | 12U W=565mm D=600mm Montajli COM-BOX | 12U | 565x600x580 | 19" | 479 | 568 | 585x620x600 | 1 | 23,4 | 24,9 | 12 | 1200x1300x2150 | 350 | 593 |
| MR.WTC16U60MN.XX | 16U W=565mm D=600mm Montajli COM-BOX | 16U | 565x600x755 | 19" | 657 | 746 | 585x620x775 | 1 | 30,0 | 31,5 | 10 | 1200x1300x2450 | 346 | 593 |
| MR.WTC20U60MN.XX | 20U W=565mm D=600mm Montajli COM-BOX | 20U | 565x600x935 | 19" | 835 | 924 | 585x620x955 | 1 | 36,7 | 38,2 | 8 | 1200x1300x2250 | 322 | 593 |